Alu-tec
Windows & Doors

BSF70 Bifolding Doors

P-06-200 Sash

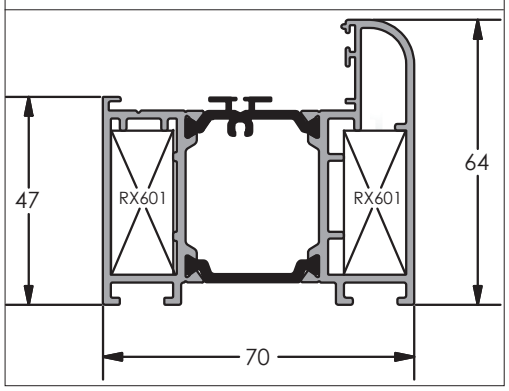

P-06-202 Square Sash

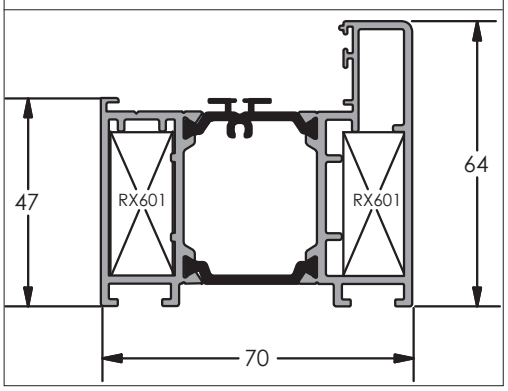

P-06-100 Standard Frame

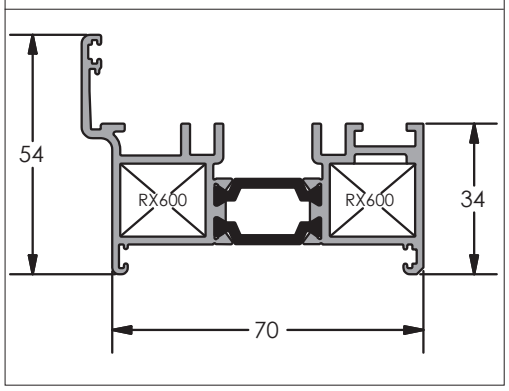

P-06-130 Low Threshold

*Not weather rated

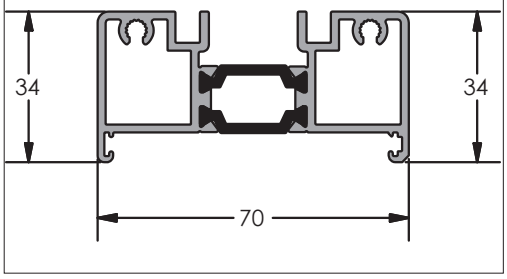

P-06-131 Room Divider

*Not weather rated - internal use only

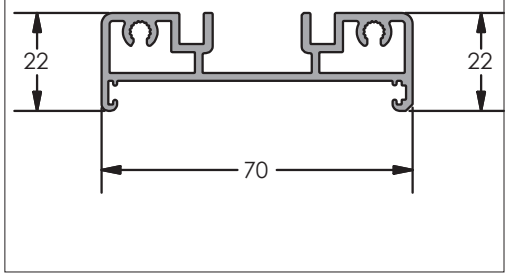

P-06-132 Low Threshold with cill nosing

*Not weather rated

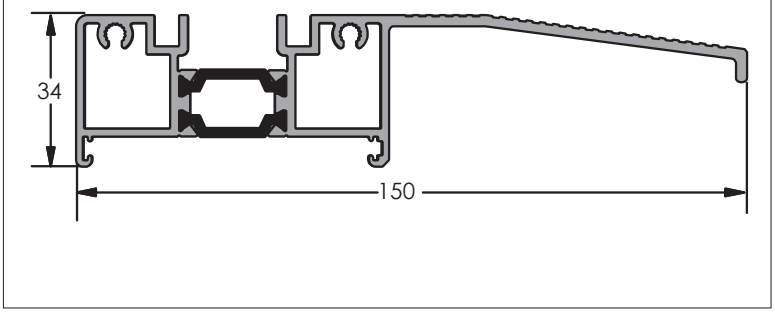

AW513 - Bead

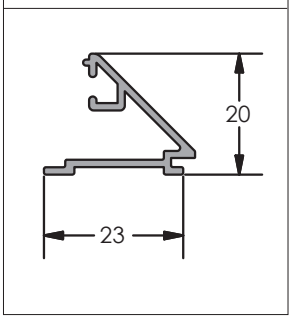

AW660 Bead

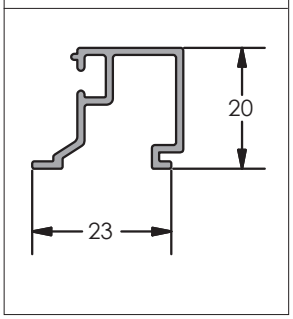
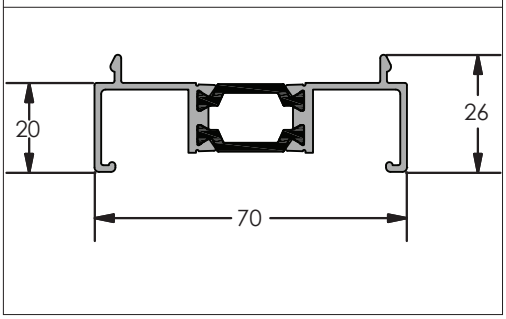
AW724 - 20mm Extender